INSTITUTE OF EXPERIMENTAL PHYSICS
SLOVAK ACADEMY OF SCIENCES

THE 17th SMALL TRIANGLE MEETING on theoretical physics

September 7–11, 2015 | Sveta Nedelja, Hvar, Croatia

Quasiclassical theory of the ionization of the hydrogen-like atom by an external electrostatic field

O.K. Reity, V.K. Reity, V.Yu. Lazur

Department of Theoretical Physics, Uzhhorod National University, 54 Voloshyna Street, Uzhhorod 88000, Ukraine

Abstract

The recurrent scheme for finding the quasiclassical solutions of the one-dimensional equation obtained after separation of variables in the Schrödinger equation in the parabolic coordinates is elaborated. The method of quasi-classical localized states is developed for the Dirac equation with arbitrary axially symmetrical potential of barrier type which does not permit complete separation of variables. Using the proposed quasiclassical methods the non-relativistic and relativistic wavefunctions for hydrogen-like (H-like) atom in the external uniform electrostatic field of intensity F are constructed in classically forbidden and allowed regions. The general analytical expressions for leading term of the asymptotic (at small F) behaviour of ionization rate of H-like atom in the uniform electrostatic field are obtained for the non-relativistic and relativistic cases.

1 Introduction

The problem of hydrogen atom in an electric field plays the fundamental role in quantum mechanics and atomic physics and has many applications (see, for example, [1, 2, 3] and the references therein). Since the twenties (see, for instance, review in [4]), properties of an energy spectrum of hydrogen atom and other atoms in external fields were rather intensively studied in the framework of the Schrödinger equation.

At the same time the logic of development of the studies of highly ionized atomic systems demands the formulations of various new problems, similar to those that has been solved only for neutral (or weakly ionized) atomic systems. The relativistic character of motion of electrons in the fields created by multiply charged ions (the characteristic velocity of the electron in H-like ions with nuclear charge Z is $\sim \alpha Zc$; α is the fine structure constant, c is the velocity of light) distinguishes them drastically from neutral atoms. Thus, the consistent theory of tunnel ionization of such systems should be essentially relativistic since the relativistic effects are not small in this case, and moreover they determines the orders of magnitudes of spectral characteristics.

In order to construct such a theory one should employ the solution of the relativistic problem of the electronic motion in the field created by nucleus and constant uniform electric field. Since the Dirac equation with such superpositional potential does not permit complete separation of variables in any orthogonal system of coordinates, the given problem has no exact analytical solution, and numerical methods are still demand significant computational efforts.

The relativistic calculations of the linear Stark effect are carried out by means of perturbation theory [5, 6], and quadratic Stark effect was treated by means of RCGF (Relativistic Coulomb Green Function) method in the form of the expansion in powers of $Z\alpha$ [7]. However, the publications in this field are basically devoted to calculation of the position of quasistationary level, and there are only rare cases of calculation of level width $\Gamma = \hbar w$ (w is the tunnel ionization rate) in the relativistic case. In our previous paper [8] the hybrid version of spherically symmetrical model of the Stark effect with account the Lorentz structure of interaction potential has been studied within quasiclassical approximation. The ionization rate of s-level, whose binding energy can be of order of the rest energy, in electric and magnetic fields has been calculated by means of generalization of the imaginary time method (ITM) [9] and so-called ADK-theory [10]. However, in the general case, widths of quasistationary states are not found until now.

Owing to such situation in the theory and intensive experimental researches during last years, asymptotic methods of calculation of ionization rate, which are based on clear physical ideas, describing the below-barrier electronic transition, become especially important. From this point of view it is worthwhile to use the quasiclassical approximation which enables one to find the approximative analytical solutions of the relativistic problem and to express required ionization probability in terms of quantum penetrability of the potential barrier which separates domains of discrete and continuous spectra. As it is known, this method has rather high accuracy even for small quantum numbers.

In the present paper we apply quasiclassial approximation to both the non-relativistic and relativistic problems of tunnel ionization of H-like ion in the constant uniform electric field. The first problem is much simpler than the second one due to separability of the Schrödinger equation in the parabolic coordinates. In this problem we can use the expansion in powers of the Planck constant $\hbar$. For the relativistic problem we apply the method of quasiclassical localized states for the Dirac equation with axially symmetrical potential whose basics were described in [11].

2 Quasiclassical solutions of the non-relativistic problem of atom in the constant uniform electric field

The potential of H-like atom with charge Z in the constant uniform electric field (here the intensity vector $\vec{F}$ is opposite to the axis z) can be represent in the form

($\hbar = e = m_e = 1$)

$$V = -Z/r - Fz. \tag{1}$$

As it is known [1] the Schrödinger equation with potential (1) permits complete separation of variables in the parabolic coordinates $\xi = r + z$, $\eta = r - z$, $\phi = \mathrm{arctg}(y/x)$. For this purpose we seek its solution in the form

$$\Psi = (\xi\eta)^{-1/2}\varphi(\xi)\chi(\eta)e^{\pm im\phi}, \tag{2}$$

where $m = 0, 1, 2, \ldots$ is the absolute value of the magnetic quantum number. Substituting (2) into the Schrödinger equation, we obtain the following equations for the unknown functions $\varphi(\xi)$ and $\chi(\eta)$:

$$\frac{d^2\varphi}{d\xi^2} + \left(\frac{E}{2} + \frac{\beta_1}{\xi} + \frac{1-m^2}{4\xi^2} + \frac{F}{4}\xi\right)\varphi = 0, \tag{3}$$

$$\frac{d^2\chi}{d\eta^2} + \left(\frac{E}{2} + \frac{\beta_2}{\eta} + \frac{1-m^2}{4\eta^2} - \frac{F}{4}\eta\right)\chi = 0, \quad \beta_1 + \beta_2 = Z. \tag{4}$$

For the energy E of quasistationary level we shall use the known expansion [12]

$$E = -\frac{Z^2}{2n^2} - \frac{3n(n_1 - n_2)F}{2Z} + O(F^2), \tag{5}$$

where $n = n_1 + n_2 + m + 1$ is the principle quantum number.

Within the perturbation theory Damburg and Kolosov [13] have found the asymptotic (at small F) solutions of the equations (3), (4). Substituting them into the formula (2), normalizing the wavefunction Ψ to unity and taking into account only leading terms in $F \ll 1$ and $\xi^{-1} \ll 1$ one can obtain

$$\varphi_0 = C_0(\gamma\xi)^{n_1+m/2}e^{-\gamma\xi/2}, \quad \chi_0 = (\gamma\eta)^{m/2}e^{-\gamma\eta/2}L^m_{n_2}(\gamma\eta), \tag{6}$$

$$C_0 = (-1)^{n_1}\sqrt{\frac{n_2!\gamma^3}{\pi n n_1!(n_1+m)!(n_2+m)!}},$$

$\gamma = \sqrt{-2E}$, $L^m_k(x)$ is the Laguerre polynomial.

The solutions of the equation (3) at large ξ are oscillating and formula (6) is unapplicable here. The limitation of applicability of the solution (6) is the standard requirement of smallness of the perturbation $F\xi/4$ comparing with the "Coulomb field" β_1/ξ. This gives the condition $0 \leqslant \xi \ll \xi_m$ where $\xi_m = \sqrt{4\beta_1/F}$ is the point in which contributions of the "Coulomb field" and external electric field in the "potential energy" $U_1(\xi)$ are equal.

In papers [13, 14, 15] for construction of solution beyond the range $0 \leqslant \xi \leqslant \xi_m$ the etalon equation method is used. This method is quite cumbersome in applications, especially when to find higher corrections. We use here simpler the WKB method which is applicable to obtain the asymptotic expression for the ionization rate w having even larger region of applicability than result of the etalon equation method. Note that Smirnov and Chibisov used the quasiclassical

approximation [16] but their result for γ is incorrect because does not contain the multiplier $\exp[3(n_2 - n_1)]$.

Let us seek the solution of (3) in the following form:

$$\varphi = e^{S/\hbar} \sum_{n=0}^{\infty} \hbar^n \varphi^{(n)}. \tag{7}$$

Having substituted (7) into (3), preliminary restoring the Planck constant $\hbar$ and equating to zero the coefficients of each power of $\hbar$, we arrive at the hierarchy of equations for the unknown functions $S(\xi)$ and $\varphi^{(n)}(\xi)$, which are analytically solvable:

$$S(\xi) = -\int_{\xi_1}^{\xi} q(\xi')d\xi', \quad \varphi^{(0)} = \frac{C^{(0)}}{\sqrt{q}}, \tag{8}$$

$$\varphi^{(n)} = \frac{1}{\sqrt{q}} \left[\int \frac{1}{2\sqrt{q}} \left(\varphi^{(n-1)\prime\prime} - \frac{m^2 - 1}{4\xi^2} \varphi^{(n-1)} \right) d\xi + C^{(n)} \right], \tag{9}$$

where $n = 1, 2, \ldots$, $C^{(n)}$ are arbitrary constants, $q = \sqrt{2(U - E/4)}$, the function $U(\xi) = -\beta_1/2\xi - F\xi/8$ plays a role of the effective potential energy (see Fig. 1).

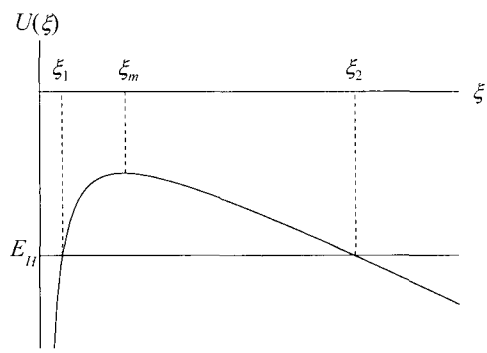

Figure 1: The effective potential energy $U(\xi)$; $E_H = E/4$; ξ_1, ξ_2 are roots of equation $q(\xi) = 0$, ξ_m is the maximum point

According to the general conditions of the quasiclassical approximation applicability [1] the potential barrier should be quite wide ($\xi_1 \ll \xi_2$, where $\xi_{1,2}$ are roots of equation $q(\xi) = 0$). This gives the requirement $16\beta_1 F/\gamma^4 \ll 1$, and the range $\xi_1 \ll \xi \ll \xi_m$ (ξ_m is the maximum point of the potential barrier) exists where one can match the WKB solution (7) with the asymptotic behaviour (6):

$$\varphi \underset{\xi_1 \ll \xi \ll \xi_m}{\simeq} \varphi_0. \tag{10}$$

Using condition (10) we obtain the normalized wavefunction in the below-barrier region. Using the Zwaan rule [1] this wavefunction can be continued in

the classically allowed region $\xi > \xi_2$ where the divergent wave corresponds to the quasistationary state (hereinafter $\hbar = 1$ again)

$$\varphi(\xi) = \frac{C^{(0)} \exp\left[-\int_{\xi_1}^{\xi_2} q(\xi)d\xi\right]}{\sqrt{p(\xi)}} \exp\left\{i\int_{\xi_2}^{\xi} p(\xi')d\xi' + \frac{i\pi}{4}\right\}, \tag{11}$$

$$C^{(0)} = \frac{(-1)^{n_1}C_0}{n_1!\sqrt{2}}\left(\frac{\beta_1}{\gamma}\right)^{n_1+(m+1)/2} e^{-\beta_1/\gamma}, \quad p = iq = \frac{1}{2}\sqrt{F\xi - \gamma^2 + \frac{4\beta_1}{\xi}}. \tag{12}$$

The probability of the system decay in the unit of time (or ionization rate) w is determined as the total probability flux through a surface separating the H-like atom from other part of space [1]. Substituting (2), (6), (11), (12) into the expression for the ionization rate [1] we get

$$w = \frac{Z^2}{n^3 n_1!(n_1+m)!}\left(\frac{\beta_1}{\gamma e}\right)^{2n_1+m+1} e^{-2J}, \quad J = \int_{\xi_1}^{\xi_2} q(\xi)d\xi. \tag{13}$$

The barrier integral J can be calculated in terms of the complete elliptic integrals of 1-st and 2-nd kind, $K(k)$ and $E(k)$ correspondingly [8, 17]:

$$J = \sqrt{F\xi_2}\left[(\xi_1+\xi_2)E(k) - 2\xi_1 K(k)\right]/3, \quad k = \sqrt{1-\xi_1/\xi_2}. \tag{14}$$

If in the formula (13) to expand (14) in powers of F then one can get the expression

$$w = \frac{Z^2}{n^3 n_1!(n_1+m)!}\left(\frac{4Z^3}{n^3 F}\right)^{2n_1+m+1} \exp\left[-\frac{2Z^3}{3n^3F} - 3(n_1-n_2)\right], \tag{15}$$

coinciding with the Slavyanov's result [14] at $Z = 1$. Taking into account the next term in the expansions (6), (7) allows to find the formula (44) obtained in [13] within the etalon equation method.

Comparing calculation results for ionization rate of the ground state hydrogen atom obtained by means of the formulae (13), (15), and (44) from [4] with the numerical calculations [13] shows that increasing the field strengths F from 0.020 to 0.075 a.u. leads to increasing the relative error from 0.7 to 14% for (13), from 11 to 74% for (15), and from 1.3 to 17% for (44) [4], i.e. formula (13) has more accuracy than (15) and even (44) [4] that contains the second correction of order of F^2.

For excited states the differences between relative errors of (13) and each of (15) and (44) [4] are even more significant than for the ground state, excluding the state $n_1 = n_2 = 0$, $m = 1$, for which the last formula gives accidentally very good result. Obviously, such high accuracy of the formula (13) is connected with use of the exact expression for the barrier integral taking into account partially higher-order corrections in F, neglected in (15) and (44) [4].

For finding the tunnel ionization rate of singly charged negative ions (i.e. H^-, J^- etc.), in (15) it is necessary to put $Z = 0$. If the particle is in weakly boun

states in the central field with small radius of action r_0 then beyond this radius the asymptotic behaviour of the unperturbed ($F = 0$) radial wavefunction is of the form [1]

$$R_{lm}^{(as)} = br^{-1}e^{-\gamma r}, \tag{16}$$

where b is determined by means of normalization. When $r_0 \ll 1$ the behaviour of the wavefunction within the potential well $0 \leqslant r \leqslant r_0$ is inessential because the particle stands basically beyond the well. This gives $b \approx \sqrt{2\gamma}$ and the ionization rate

$$w = \frac{b^2(2l+1)}{m!\gamma^m}\frac{(l+m)!}{(l-m)!}\left(\frac{F}{4\gamma^2}\right)^{m+1} e^{-2\gamma^3/3F}. \tag{17}$$

For s-states the formula (17) coincides with the known result of Demkov and Drukarev [1, 18].

3 Quasiclassical solutions of the relativistic problem of atom in the constant uniform electric field

The difficulty in considering the relativistic problem of atom in the constant uniform electric field related to the fact that the Dirac equation with the potential (1) does not permit complete separation of variables in any orthogonal system of coordinates. To solve this problem the combination of quasiclassical approximation and boundary layer method [11] is applied. Hereinafter we shall call such approach as "*method of quasiclassical localized states*" (MQLS).

The main idea of this method is as follows. We construct the solution of the Dirac equation in the below-barrier range, where, in opposite to the case of the classically allowed range, the wavefunction is often localized in the vicinity of the most probable tunnelling direction, that substantially simplifies the whole problem: it is natural to expand all the quantities in equations arisen after expansion of solution in powers of $\hbar$, including the solutions, in the vicinity of the z-axis. Therefore, one can find solutions of the problem in the form of power series in coordinate ρ perpendicular to z. The coefficients of these series satisfy equations that can be solve exactly except of the Riccati equation which is solved approximately [11].

The effective potential

$$U_{eff}(z,\varepsilon) = \varepsilon V_0 - V_0^2/2c^2, \quad V_0(z) = -Z/z - Fz, \quad \varepsilon = E_{rel}/c^2 \tag{18}$$

corresponding to this problem has the form of potential with barrier similar to non-relativistic one (see Fig. 1). Here E_{rel} is the relativistic energy of electron, c is the velocity of light.

If $F \ll \lambda^4/4Z$ ($\lambda = c\sqrt{1-\varepsilon^2}$) then the range $z_1 \ll z \ll z_m$ (z_1 is the left tuning point, and z_m is the maximum point of barrier) exists where one can match the WKB solution with the asymptotic (at large z and small ρ) behaviour of the relativistic wavefunction Ψ_{n_r,j,m_j} ($l = j \pm 1/2$) of H-like atom with perturbed energy [6]

$$E_{rel} = E_0 - \operatorname{sgn}\varkappa\frac{3}{4}\sqrt{\Lambda^2 - \varkappa^2}\frac{(n_r + \gamma_{rel})m_j F}{j(j+1)Z}. \tag{19}$$

Here $E_0 = c^2/\sqrt{1+[Z\alpha/(n_r+\gamma_{rel})]^2}$ is the energy of non-perturbed relativistic H-like atom, $N = \sqrt{n^2 - 2n_r(|\varkappa| - \gamma_{rel})}$, $\varkappa = (-1)^{j-l+1/2}(j+1/2)$, $n_r = n - j - 1/2$, $\gamma_{rel} = \sqrt{\varkappa^2 - (Z/c)^2}$.

Having normalized wavefunction in below-barrier region and using the Zwaan rule [1] one can continue it into the classically allowed region $z > z_2$ (z_2 is the right tuning point for the effective potential (18)). Calculating the total probability flux through the plane which is perpendicular to z-axis and located in the domain $z > z_2$, we obtain:

$$w = \frac{2\lambda_0 A^2}{(1+\varepsilon_0)(|m_j|-1/2)!}\frac{(j+|m_j|)!}{(j-|m_j|)!}\left(\frac{Z}{2\lambda_0^2 e}\right)^{\frac{2\varepsilon_0 Z}{\lambda_0}}\left(4\lambda_0^2\int\limits_{z_1}^{z_2}\frac{dz}{q_0(z)}\right)^{-|m_j|-1/2}$$
$$\times\exp\left(-2\int\limits_{z_1}^{z_2} q_0(z)dz - 2Z\alpha\arccos\varepsilon_0\right), \quad (20)$$

where $q_0 = \sqrt{2\,(U_{eff} - E_{eff})}$, $E_{eff} = -\lambda^2/2$ is the effective energy, $\varepsilon_0 = E_0/c^2$, $\lambda_0 = c\sqrt{1-\varepsilon_0^2}$,

$$A = \sqrt{1+\varepsilon_0}\lambda_0\,(2\lambda_0)^{\varepsilon_0 Z/\lambda_0}\left(\frac{Z/\lambda_0 - k}{2Z\,n_r!\,\Gamma\,(2\gamma_{rel}+n_r+1)}\right)^{1/2}, \quad (21$$

where $k = \varkappa$ for the ground state and state with $l = j - 1/2$; $k = 0$ for all other states.

The integrals in (20) can be approximately calculated like it was done above in the non-relativistic case. Omitting details of these calculations we write the final result for the ionization rate:

$$w = \frac{2\lambda_0 A^2}{(1+\varepsilon_0)(|m_j|-1/2)!}\frac{(j+|m_j|)!}{(j-|m_j|)!}\frac{e^{2Z\alpha\arccos\varepsilon_0}}{(2c\arccos\varepsilon_0)^{|m_j|+1/2}}$$
$$\times\left(\frac{2\lambda_0^2}{F}\right)^{\frac{2\varepsilon_0 Z}{\lambda_0}-|m_j|-1/2}\exp\left\{-\frac{c^3\Phi(\varepsilon)}{F}\right\}, \quad (22$$

where $\Phi(\varepsilon) = \arccos\varepsilon - \varepsilon\sqrt{1-\varepsilon^2}$. Formula (22) differs from the result of [9] by the asymptotic coefficient A obtained in [9] using the asymptotic behaviour of Coulomb wavefunction within the Klein-Gordon equation. For the ground state the expression (22) coincides with the result of [10] obtained by means of the relativistic version of ADK theory.

Conclusion

The recurrent scheme of finding the quasiclassical solutions of the one-dimensional equation obtained after separation of variables of the Schrödinger equation in the parabolic coordinates is elaborated. The method of quasiclassical localized states is developed for the Dirac equation with arbitrary axially symmetrical potential

which does not permit complete separation of variables. These approaches are based on physically clear ideas and applied to obtain the wavefunctions and general analytical expressions for leading term of the asymptotic behaviour of ionization rate of H-like atom in the uniform electrostatic field in the non-relativistic and relativistic cases when intensity of electric field F is much smaller than intensity of intra-atomic field.

References

[1] L. D. Landau, E. M. Lifshitz, *Quantum Mechanics: Nonrelativistic Theory* (Oxford Univ. Press, Oxford, 1975)

[2] H. A. Bethe and E. E. Salpeter, *Quantum Mechanics of One- and Two-Electron Atoms* (Springer-Verlag, Berlin, 1957)

[3] B. M. Smirnov, *Physics of Atoms and Ions* (Springer, New York, 2003)

[4] R. J. Damburg, V. V. Kolosov, in: *Rydberg States of Atoms and Molecules*, edited by R. F. Stebbings and F. B. Dunning (Cambridge University Press, Cambridge, 1983)

[5] R. C. Kulkarni, N. V. Swamy, and E. Chaffin, Phys. Rev. A **7**, 27–33 (1973)

[6] S. A. Zapryagaev, Optika i spektroskopiya **44**, 892–899 (1978)

[7] S. A. Zapryagaev and N. L. Manakov, Yad. Fiz. **23**, 917–925 (1976)

[8] V. Yu. Lazur, O. K. Reity, and V. V. Rubish, Int. J. Mod. Phys. A **25**, 3235–3259 (2010)

[9] V. D. Mur, B. M. Karnakov, and V. S. Popov, JETP **87**, 433–444 (1998)

[10] N. Milosevic, V.P. Krainov, and T. Brabec, J. Phys. B **35**, 3515–3530 (2002)

[11] O. K. Reity, V. Yu. Lazur, and A. V. Katernoha, J. Phys. B **35**, 1–17 (2002)

[12] H. J. Silverstone, Phys. Rev. A **18**, 1853–1864 (1978)

[13] R. J. Damburg and V. V. Kolosov, J. Phys. B **11**, 1921–1930 (1978)

[14] S. Yu. Slavyanov, Problems of Mathematical Physics [in Russian] **4**, 125 (1970)

[15] T. Yamabe, A. Tachibana, and H. J. Silverstone, Phys. Rev. A **16**, 877–890 (1977)

[16] B. M. Smirnov and M. I. Chibisov, Sov. Phys. JETP **22**, 585–592 (1966)

[17] V. Yu. Lazur, O. K. Reity, and V. V. Rubish, Theor. Math. Phys. **155**, 825–847 (2008)

[18] N. N. Demkov and G. F. Drukarev, Soviet Phys. JETP **20**, 614–618 (1965)